EMISSION MONITORING SYSTEMS

We *care* about the environment

GAS SAMPLING PROBES
Application-optimized gas sampling for longer maintenance intervals

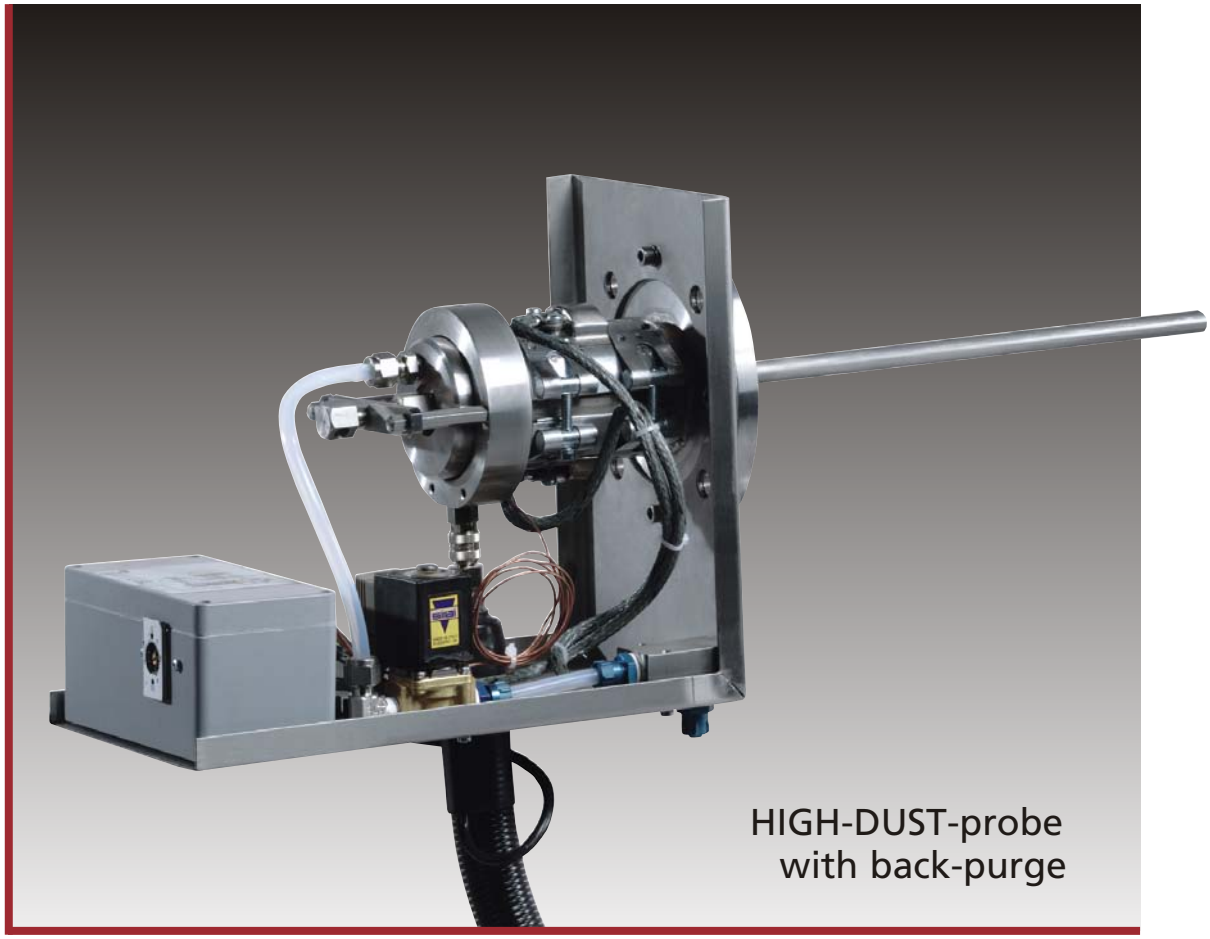

HIGH-DUST-probe
with back-purge

MRU since 1984 ®
AIR fair
EMISSION MONITORING SYSTEMS

STAINLESS STEEL PROBE TUBE FOR UP TO 650 °C
INCONEL STEEL PROBE TUBE FOR UP TO 1.100 °C
CERAMIC-PROBE TUBE FOR UP TO 1.700 °C

SWG 200 -1 | SWG 300 -1 | VARIOplus industrial | MGA 5 | MGA 5+

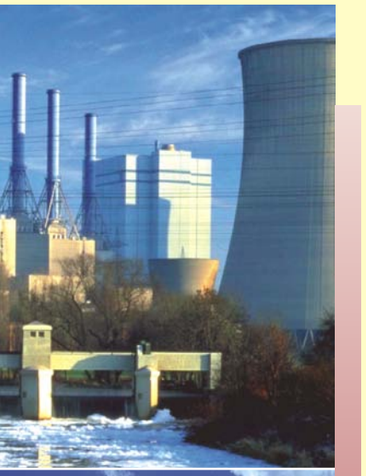

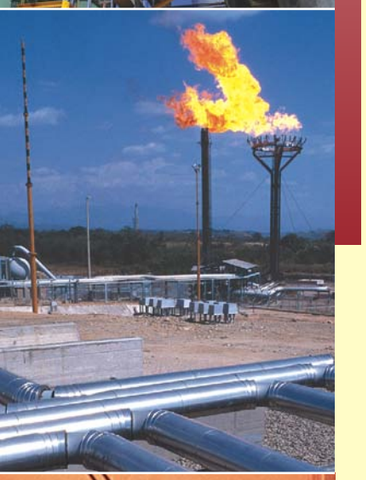

INDUSTRIAL GAS SAMPLING PROBES

Gas-sampling, tailor-made for each individual application, assures efficient, troublefree flue gas extraction.

The correct probe choice of probes ensures accurate measurement and reduces maintenance and operating cost.

MRU offers a large selection of gas sampling probes and gas sampling lines, for different applications like stainless steel probes for up to 650 °C, Inconel probes for up to 1.100 °C and ceramic probes for up to 1.700 °C.

Probes for industrial applications:

- **STATIONARY analyzers: SWG 200-1 / SWG 300-1**

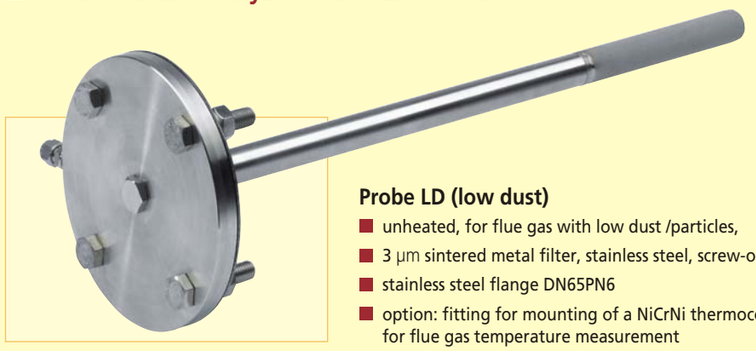

Probe LD (low dust)

- unheated, for flue gas with low dust /particles,
- 3 µm sintered metal filter, stainless steel, screw-on type
- stainless steel flange DN65PN6
- option: fitting for mounting of a NiCrNi thermocouple probe for flue gas temperature measurement

Material Probe	Flue gas temp. max. °C	Length Probe tube, mm	Ø Probe tube, mm
Stainless steel 1.4571 (SS316Ti)	500	250, 500, 750, 1.000 ... 2.000	22

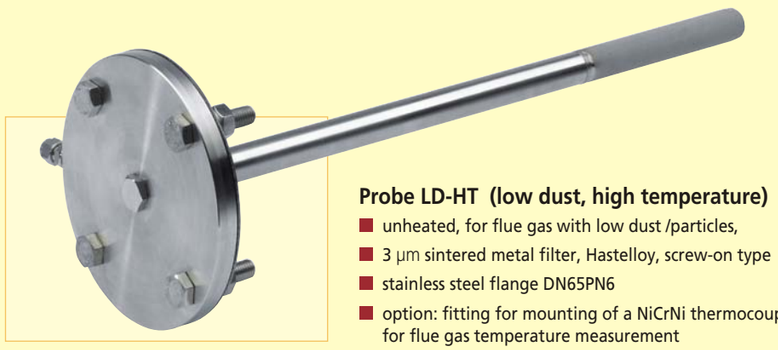

Probe LD-HT (low dust, high temperature)

- unheated, for flue gas with low dust /particles,
- 3 µm sintered metal filter, Hastelloy, screw-on type
- stainless steel flange DN65PN6
- option: fitting for mounting of a NiCrNi thermocouple probe for flue gas temperature measurement

Material Probe	Flue gas temp. max. °C	Length Probe tube, mm	Ø Probe tube, mm
Inconel steel	900	500, 750, 1.000 ... 2.000	22

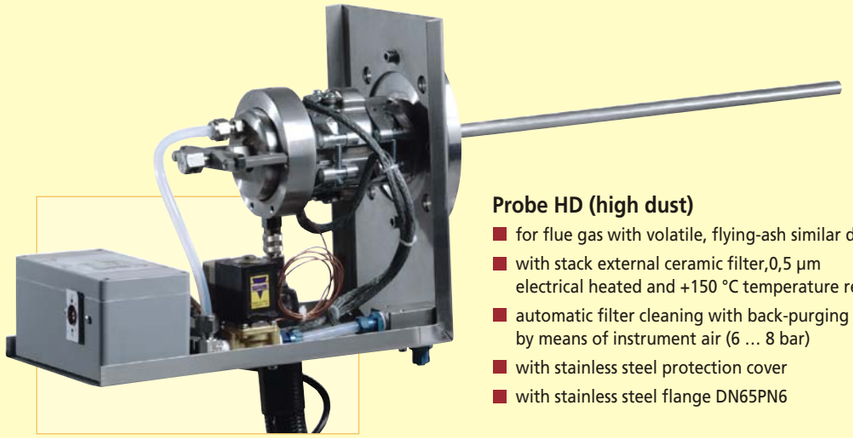

Probe HD (high dust)

- for flue gas with volatile, flying-ash similar dust
- with stack external ceramic filter,0,5 µm electrical heated and +150 °C temperature regulated
- automatic filter cleaning with back-purging by means of instrument air (6 ... 8 bar)
- with stainless steel protection cover
- with stainless steel flange DN65PN6

Material Probe tube	Flue gas temp. max. °C	Length Probe tube, mm	Ø Probe tube, mm
Stainless steel 1.4571 (SS316Ti)	650	250, 500, 750, 1.000 ... 2.000	22
Inconel steel	1.100	500, 750, 1.000 ... 2.000	22
Ceramic	1.700	1.000 ... 2.000	24

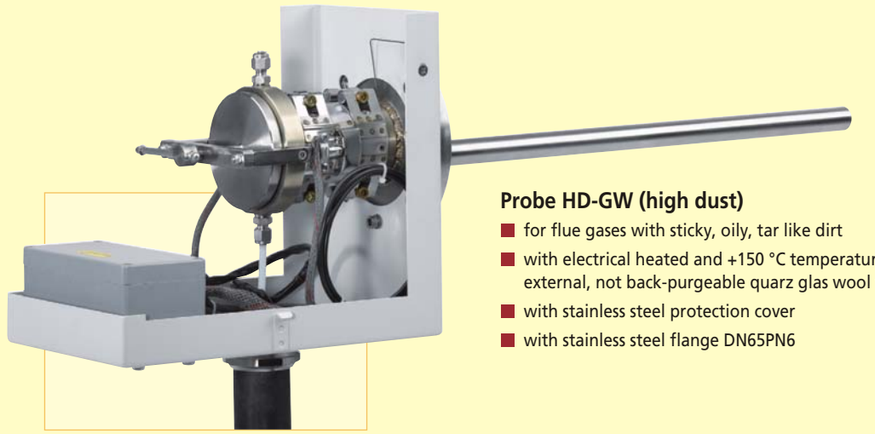

Probe HD-GW (high dust)

- for flue gases with sticky, oily, tar like dirt
- with electrical heated and +150 °C temperature regulated, external, not back-purgeable quarz glas wool filter
- with stainless steel protection cover
- with stainless steel flange DN65PN6

Material Probe tube	Flue gas temp. max. °C	Length Probe tube, mm	Ø Probe tube, mm
Stainless steel 1.4571 (SS316Ti)	650	250, 500, 750, 1.000 ... 2.000	22
Inconel steel	1.100	500, 750, 1.000 ... 2.000	22
Kanthal steel	1.300	1.000 ... 2.000	26
Ceramic	1.700	1.000 ... 2.000	24

Heated gas sampling line with exchangeable Teflon (PTFE) hose

- With all above mentioned probes it is possible to attach, heated or unheated gas sampling lines Teflon (PTFE) DN 6/4 mm.
- The heated gas sampling line has an exchangeable Teflon hose, which is temperature controlled (+120 °C) by means of the analyzer.
- The sampling line carry also internally the power supply cables for the probes HD and HD-GW.
- Heated sampling line length is up to 50 m.

Gas sampling probes for mobile analyzers

Low cost-probe (only for VARIOplus Industrial)

- use only for clean flue gas (natural gas or light oil combustion)
- with gas temperature measurement by integrated NiCrNi thermocouple (type K)
- with stack pressure measurement, static pressure (draft)
- with exchangeable probe tubes

Material Probe tube	Flue gas temp. max. °C	Length Probe tube, mm	Ø Probe tube, mm
Stainless steel 1.4571 (SS316Ti)	650	300, 500, 750, 1.000 ... 2.000	10
Inconel steel	1.100	500, 750, 1.000 ... 2.000	10

Heavy duty probe (for VARIOplus Industrial / MGA 5 / MGA 5+)

- for dusty/dirty flue gases
- with gas temperature measurement by integrated NiCrNi thermocouple (type K)
- with heated, easy exchangeable quarz glas wool filter
- with exchangeable probe tubes

Material Probe tube	Flue gas temp. max. °C	Length Probe tube, mm	Ø Probe tube, mm
Stainless steel 1.4571 (SS316Ti)	650	300, 500, 750, 1.000 ... 2.000	12
Inconel steel	1.100	500, 750, 1.000 ... 2.000	12

The probe is equipped with either unheated Viton gas sampling line or with heated, +120 °C temperature controlled Teflon gas sampling line with 3 m or 5 m length.

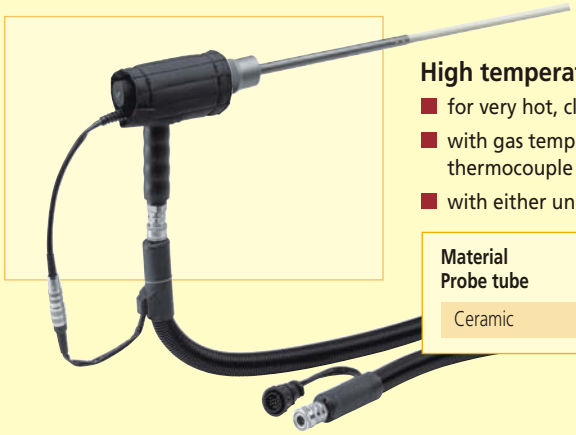

High temperature probe (for VARIOplus Industrial / MGA 5 / MGA 5+)

- for very hot, clean flue gases
- with gas temperature measurement by integrated PtRhPt thermocouple (type S)
- with either unheated Viton or heated Teflon gas sampling line

Material Probe tube	Flue gas temp. max. °C	Length Probe tube, mm	Ø Probe tube, mm
Ceramic	1.700 °C	1.000	16

Data subject to change without notice.

W6230 1GB-KO-10-019-HWH